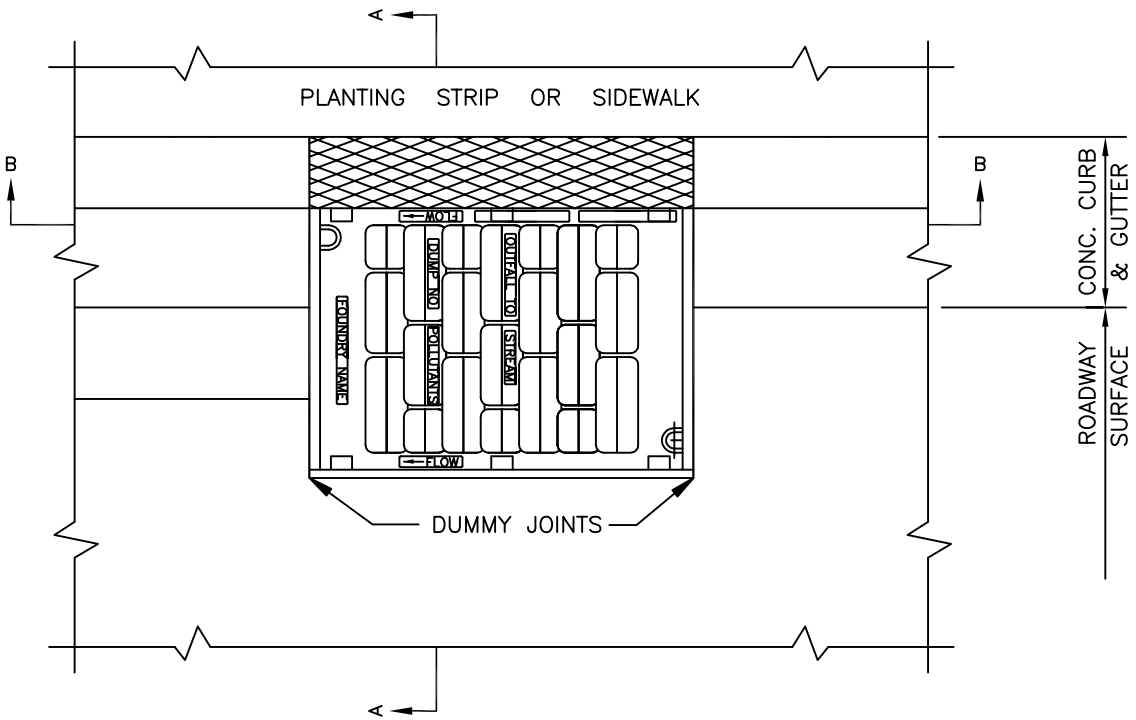

PLAN

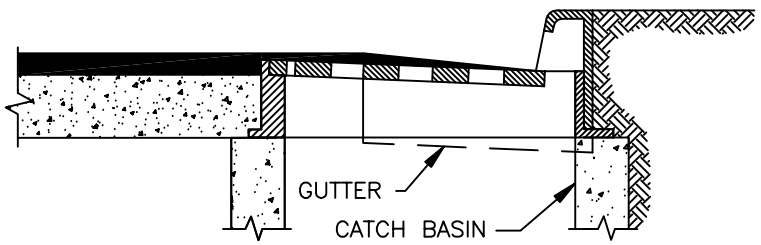

SECTION A–A

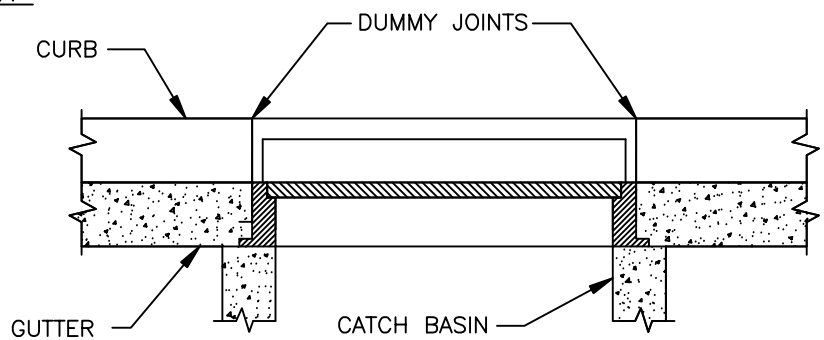

SECTION B–B

NOTE:
SET TO GRADE AND CONSTRUCT ROAD AND GUTTER TO BE FLUSH WITH FRAME.

CITY OF SEDRO-WOOLLEY WELCOME TO THE NORTH COUNTRY PUBLIC WORKS DEPARTMENT	THROUGH–CURB INLET FRAME & GRATE WITH VERTICAL CURB INSTALLATION	DWG. NO. 4–9